FCIconnect.com

PRODUCT NUMBER	PITCH
KDxx50x000J0G	5.08 mm

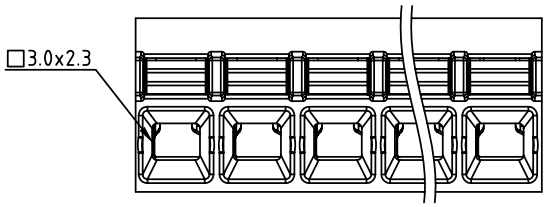

Dim A=N×5.08+0.1
Dim B=(N-1)×5.08
Dim C=(N-1)×5.08+4.2

N=Number of poles

POLES	Tolerance
2p-6p	±0.15
7p-12p	±0.25
13p-18p	±0.35
19p-24p	±0.40

PART NO.: KD xx 5 0 x 0 00J0 G

Solid block
No. of poles
02 2 poles
03 3 poles
... ...
24 24 poles

Color
0 Black (RAL9005)
2 Red (RAL3001/D)
3 Orange(RAL2011/P)
4 Yellow(RAL1018/A)
5 Green(RAL6018/T)
6 Blue (RAL5015/A)
8 Grey(RAL7035/D)
9 White(RAL1102)
C Green(RAL6018/U)

RoHS compliant
(lead<4%)
In copper Alloy

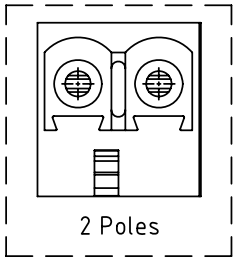

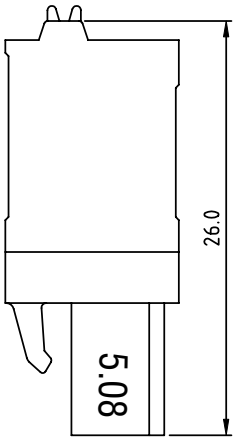

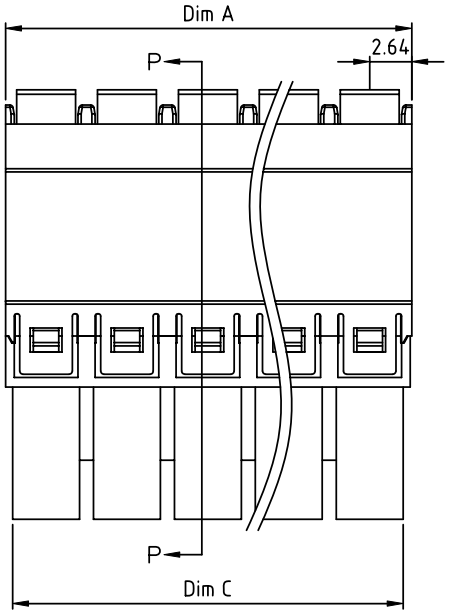

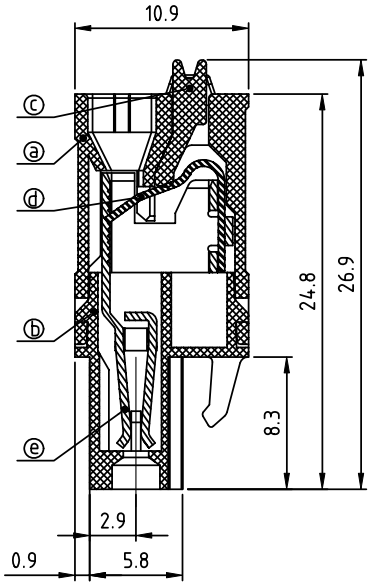

SECTION P–P

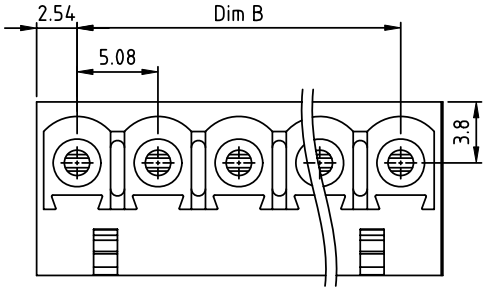

Material:
- Item ⓐ Top body: Thermoplastic (UL94V-0)
- Item ⓑ Bottom body: Thermoplastic (UL94V-0)
- Item ⓒ Terminal Lever: Thermoplastic (UL94V-0) Orange (RAL2001/P)
- Item ⓓ Spring clamp: Stainless steel
- Item ⓔ Female contact: PhBz Tin Plated

Electrical:	cULus
Voltage rating:	300 V
Current rating:	12 A
Wire range:	
Solid wire(AWG):	14-24
Stranded wire(AWG):	14-24
Wire strip length:	11-12 mm
Withstanding Voltage:	1.6 KV
Operating temperature:	-40°C to +115°C
Safety Approval:	

mat'l. code				surface ASME Y14.5	tolerance ASME Y14.5	projection	product family TERMINAL BLOCK
ltr	ecn no	dr	date	tolerances unless otherwise specified			title
				angles	linear X.±0.5 / X.X±0.3 / X.XX±0.1	MM	TERMINAL BLOCK SPRING CLAMP,PLUGGABLE PLUG
				X°±1°		scale	
				dr	EVIN ZHONG 052014	FCI	dwg no KDxx50x000J0G sheet 1 of 1 size A4
				engr	EVIN ZHONG 052014		
				chr	HANKE FENG 052014		
				appd	SHI JUN 052014		type CUSTOMER Drawing
sheet index	revision	A					
	sheet	1					